SEIKO OPTICAL
AVENIR
CCTV LENS

Email:sales@seiko-optic.com

Low Magnification NIR STANDARD Telecentric Lens for 1.1"

Model	Spectrum (nm)	Light Type	Sensor Type	Magni-fication	Mag	W.D.	F.NO	Numerical Aperture	Telece-ntricity	TV Distortion	Depth Of Field(mm)	Object Resolution	TTL (mm)	Mount	2/3" FOV (D×H×V)	1" FOV (D×H×V)	1.1" FOV (D×H×V)	Dimensions (mm)	Weight (g)
SMT11IR3W65C-L	400-1250 Low	Coaxial	1.1"	3X	3	65mm	9.5	0.162	<0.05°	<0.03%	0.048	2.07um	174.4	C	/	/	5.86×4.72x3.45	φ45.5×157.1	/
SMT11IR3W65C-I	400-1250 High	Non-Coaxial	1.1"	3X	3	65mm	9.5	0.162	<0.05°	<0.03%	0.048	2.07um	168.1	C	/	/	5.86×4.72x3.45	φ40×150.8	/

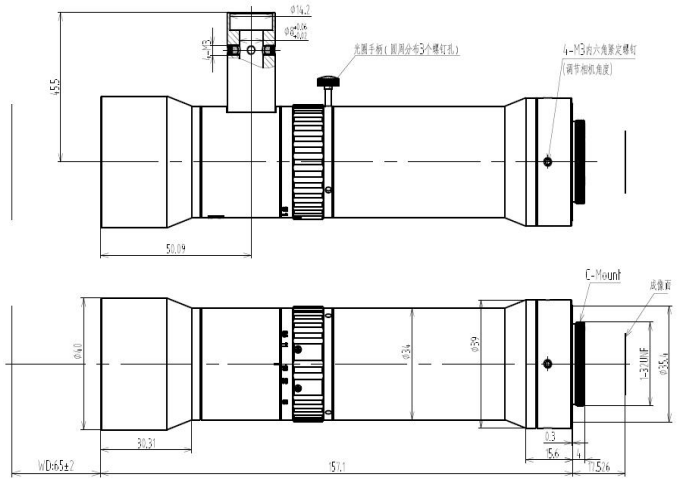

SMT11IR3W65C-L

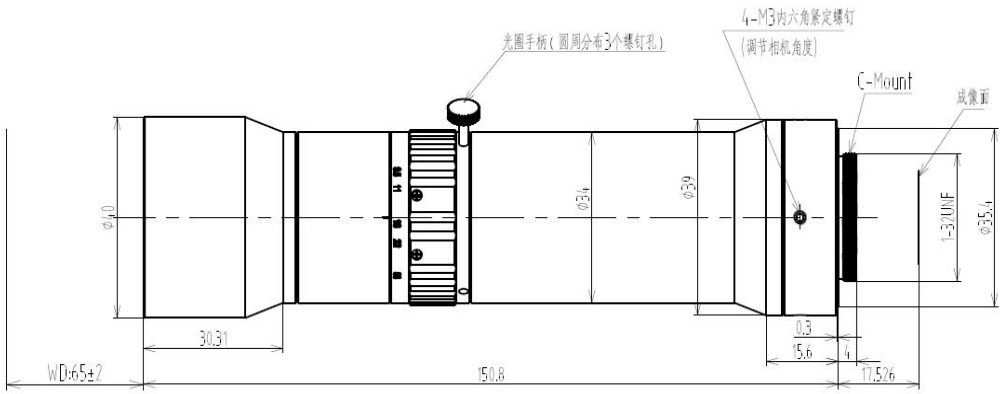

SMT11IR3W65C-I

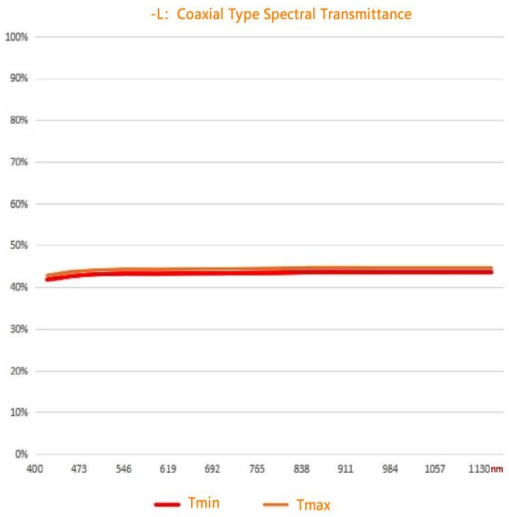

Unit: mm
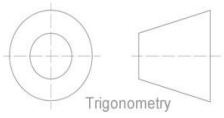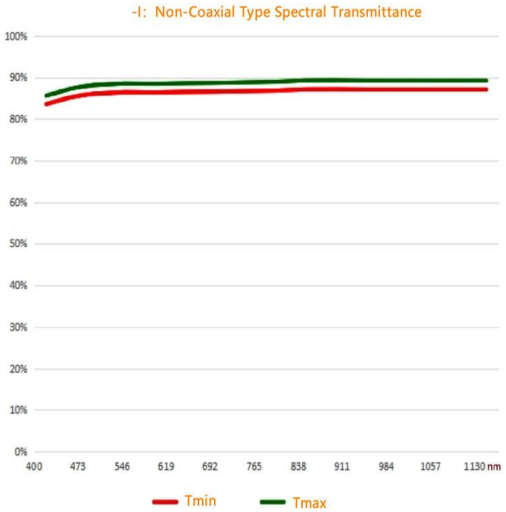
TOLERANCE :
LINEARITY TOLERANCES: ±0.05
ANGULAR TOLERANCES ARE: ±30'
DRAFT ANGLES AREA: ±0.5°/SIDE